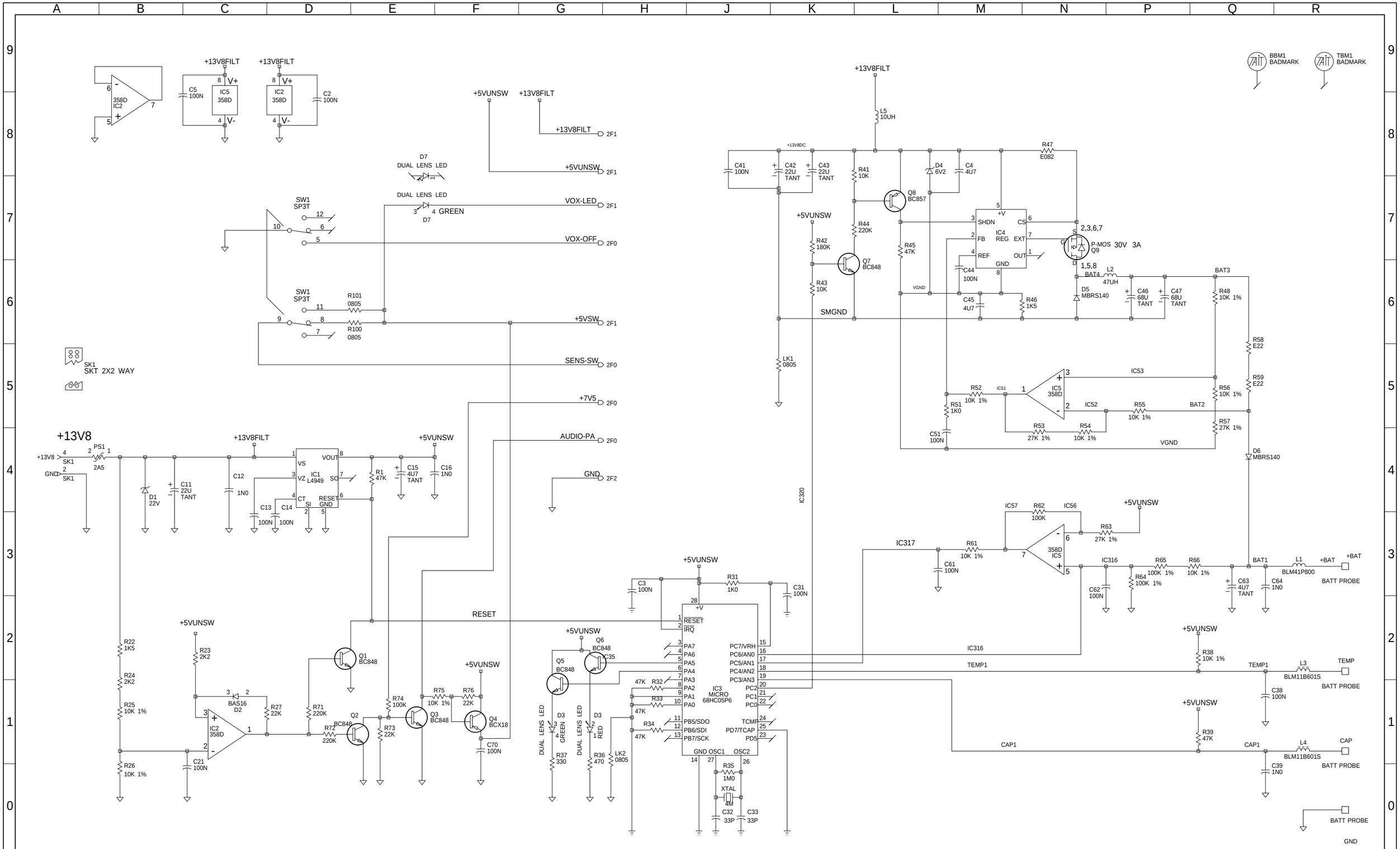

REV/ISS	AMENDMENTS	DRAWN	CHKD	D.O.	APVD	DATE

© TAIT ELECTRONICS

TAIT ORCA SERIES
CAR KIT MAIN PCB

IPN:	ISSUE:	ID:
220-01504-00	00	2.SC. 1

PROJECT:	DESIGNER:	FILE NAME:	FILE DATE:	NO.SHEETS:
ORCA	TONY.S	CAR-KIT	21-04-98	2